Post-SS-BG-CUT

Stainless Steel Posts

- With BGU cut-out
- Car or pedestrian height
- Round
- Stainless Steel construction
- Unique interchangable mounting

STAINLESS STEEL

CAMERA/ CALL BUTTON CONTROL PANEL

PROXIMITY READER CONTROL PANEL

KEYPAD CONTROL PANEL

FOR CUSTOMER FITTED CONTROL PANELS

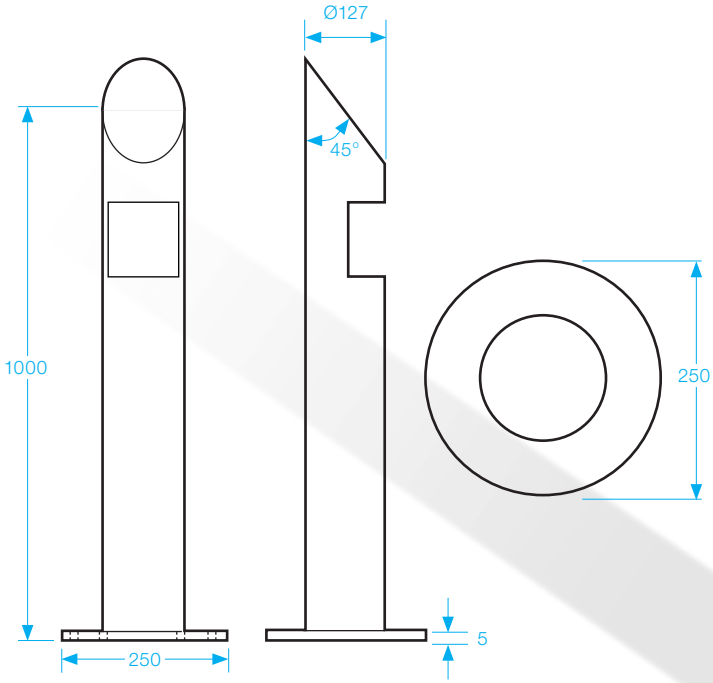

BGU CUT-OUT FOR CUSTOMER FITTED EXIT DEVICES

All dimensions in mm